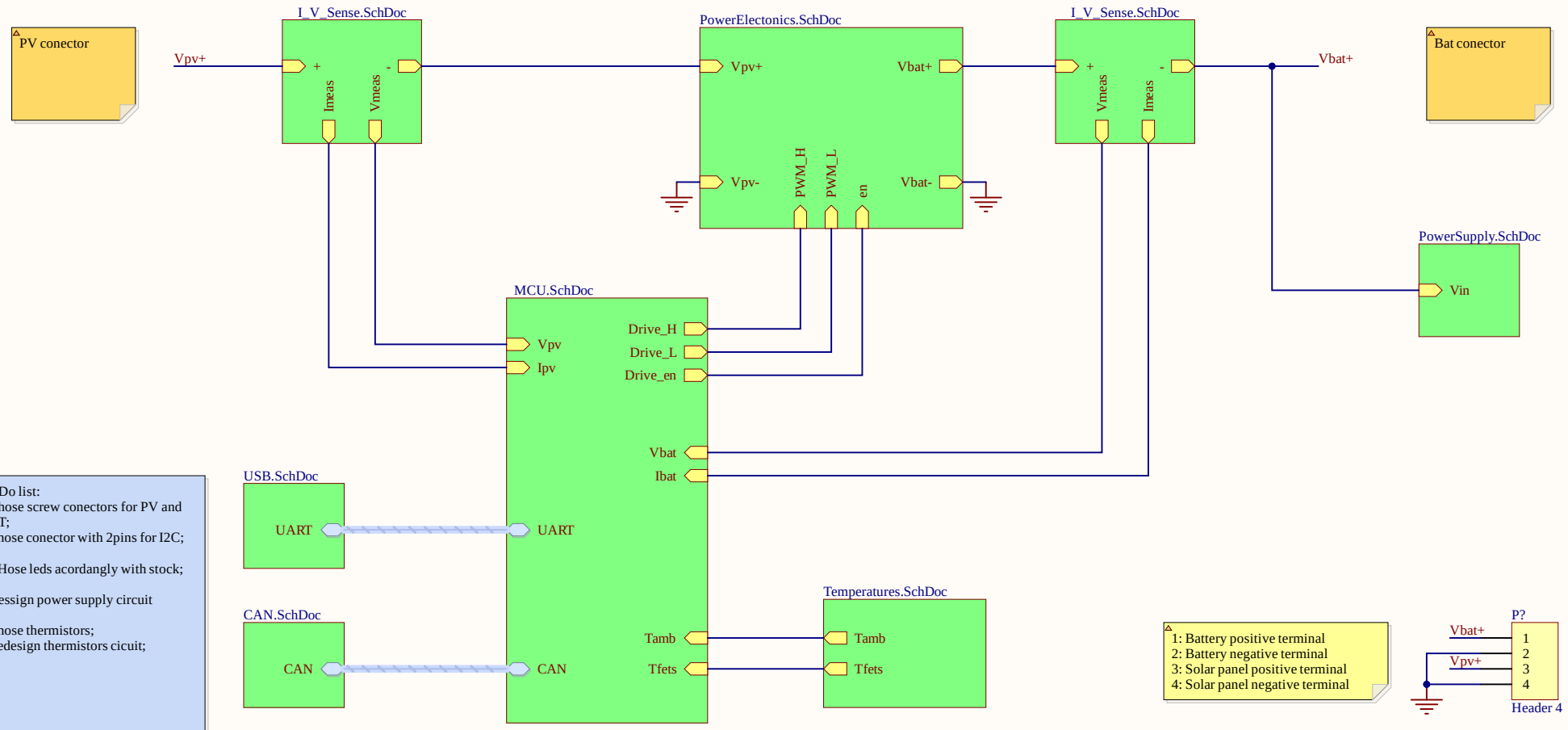

To Do list:
- Chose screw conectors for PV and BAT;
- Chose conector with 2pins for I2C;

- CHose leds acordangly with stock;

- Dessign power supply circuit

- Chose thermistors;
- Redesign thermistors cicuit;

1: Battery positive terminal
2: Battery negative terminal
3: Solar panel positive terminal
4: Solar panel negative terminal

Title: Top sheet	
Project: MPPT V1 Afonso.PrjPcb Version: 1	
Date: 4/12/2026 Author: Afonso Coelho	
Company: Técnico Solar Boat	
File: TopLevel.SchDoc Page: 1 of 9	

TÉCNICO SOLAR BOAT

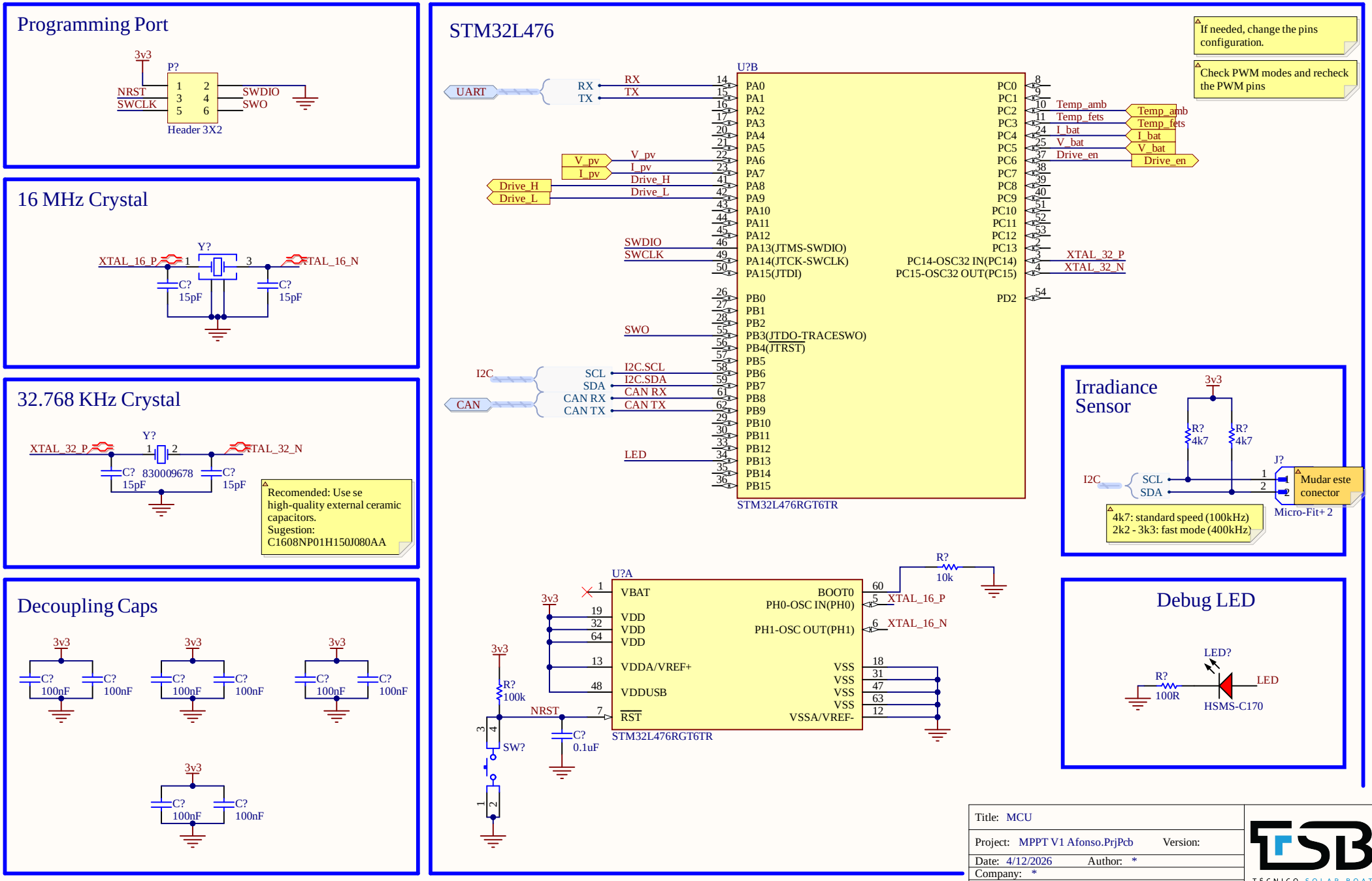
Programming Port
3v3
P?
NRST
SWCLK
SWDIO
SWO
Header 3X2
16 MHz Crystal
Y?
XTAL_16_P
XTAL_16_N
C? 15pF
C? 15pF
32.768 KHz Crystal
Y?
XTAL_32_P
XTAL_32_N
C? 15pF
830009678
C? 15pF
Recomended: Use se high-quality external ceramic capacitors. Sugestion: C1608NP01H150J080AA
Decoupling Caps
3v3
C? 100nF
STM32L476
If needed, change the pins configuration.
Check PWM modes and recheck the PWM pins
U?B
UART
RX
TX
V_pv
I_pv
Drive_H
Drive_L
SWDIO
SWCLK
SWO
I2C
SCL
SDA
CAN
CAN RX
CAN TX
LED
PA0
PA1
PA2
PA3
PA4
PA5
PA6
PA7
PA8
PA9
PA10
PA11
PA12
PA13(JTMS-SWDIO)
PA14(JTCK-SWCLK)
PA15(JTDI)
PB0
PB1
PB2
PB3(JTDO-TRACESWO)
PB4(JTRST)
PB5
PB6
PB7
PB8
PB9
PB10
PB11
PB12
PB13
PB14
PB15
PC0
PC1
PC2
PC3
PC4
PC5
PC6
PC7
PC8
PC9
PC10
PC11
PC12
PC13
PC14-OSC32 IN(PC14)
PC15-OSC32 OUT(PC15)
PD2
Temp_amb
Temp_fets
I_bat
V_bat
Drive_en
XTAL_32_P
XTAL_32_N
STM32L476RGT6TR
Irradiance Sensor
R? 4k7
J?
Mudar este conector
Micro-Fit+ 2
4k7: standard speed (100kHz)
2k2 - 3k3: fast mode (400kHz)
U?A
VBAT
VDD
VDDA/VREF+
VDDUSB
RST
BOOT0
PH0-OSC IN(PH0)
PH1-OSC OUT(PH1)
VSS
VSSA/VREF-
XTAL_16_P
XTAL_16_N
R? 10k
R? 100k
NRST
SW?
C? 0.1uF
Debug LED
LED?
R? 100R
LED
HSMS-C170
Title: MCU
Project: MPPT V1 Afonso.PrjPcb
Version:
Date: 4/12/2026
Author: *
Company: *
File: MCU.SchDoc
Page:2 of 9
TECNICO SOLAR BOAT

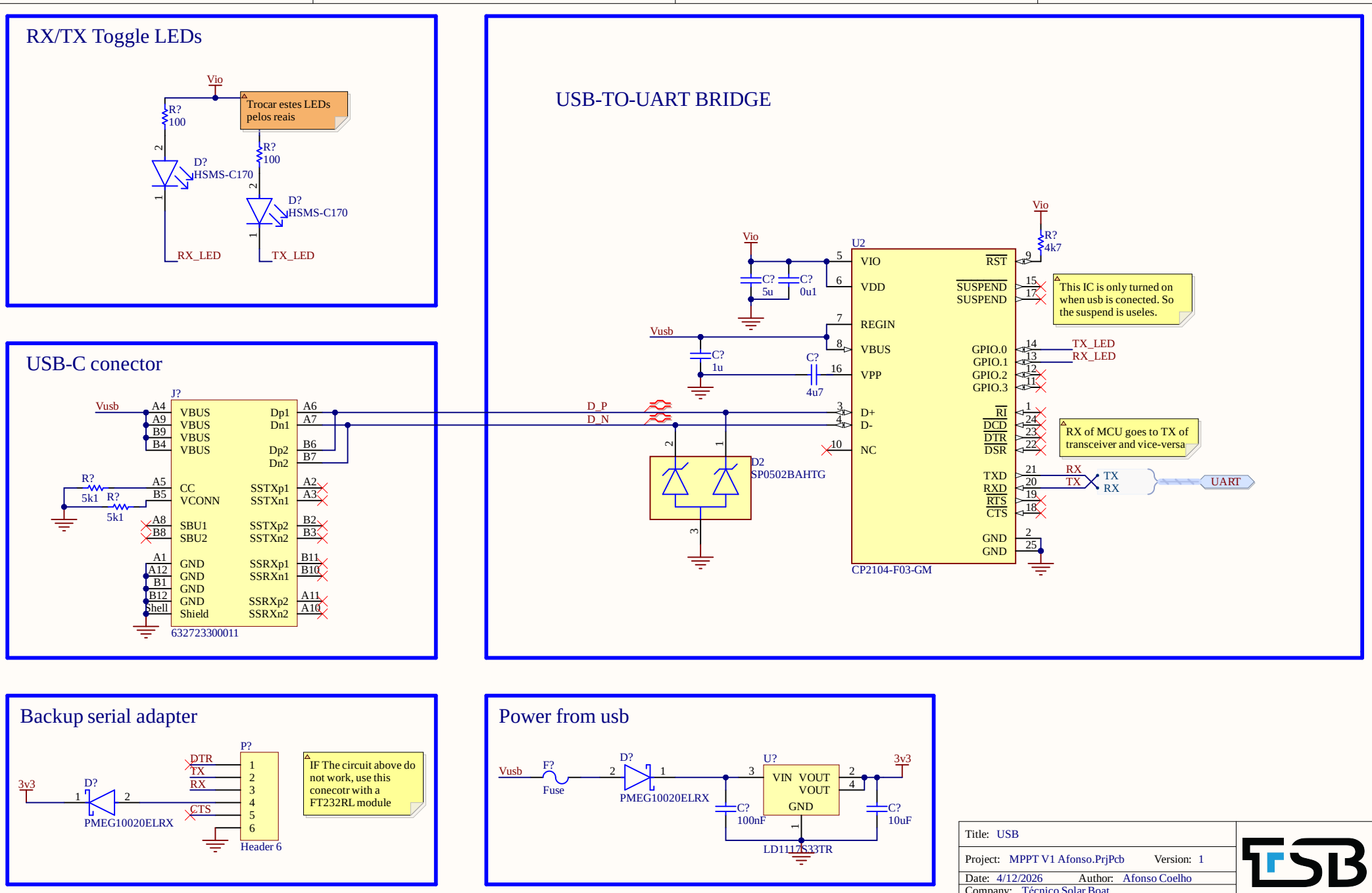
RX/TX Toggle LEDs
Vio
R?
100
Trocar estes LEDs pelos reais
D?
HSMS-C170
RX_LED
TX_LED
USB-TO-UART BRIDGE
U2
VIO
VDD
REGIN
VBUS
VPP
D+
D-
NC
RST
SUSPEND
GPIO.0
GPIO.1
GPIO.2
GPIO.3
RI
DCD
DTR
DSR
TXD
RXD
RTS
CTS
GND
CP2104-F03-GM
C?
5u
0u1
1u
4u7
R?
4k7
This IC is only turned on when usb is conected. So the suspend is useles.
RX of MCU goes to TX of transceiver and vice-versa
D_P
D_N
D2
SP0502BAHTG
Vusb
UART
USB-C conector
J?
VBUS
CC
VCONN
SBU1
SBU2
GND
Shield
Dp1
Dn1
Dp2
Dn2
SSTXp1
SSTXn1
SSTXp2
SSTXn2
SSRXp1
SSRXn1
SSRXp2
SSRXn2
632723300011
Backup serial adapter
3v3
D?
PMEG10020ELRX
P?
DTR
TX
RX
CTS
Header 6
IF The circuit above do not work, use this conecotr with a FT232RL module
Power from usb
F?
Fuse
U?
VIN
VOUT
GND
LD1117S33TR
C?
100nF
10uF
Title: USB
Project: MPPT V1 Afonso.PrjPcb
Version: 1
Date: 4/12/2026
Author: Afonso Coelho
Company: Técnico Solar Boat
File: USB.SchDoc
Page:3 of 9
TÉCNICO SOLAR BOAT

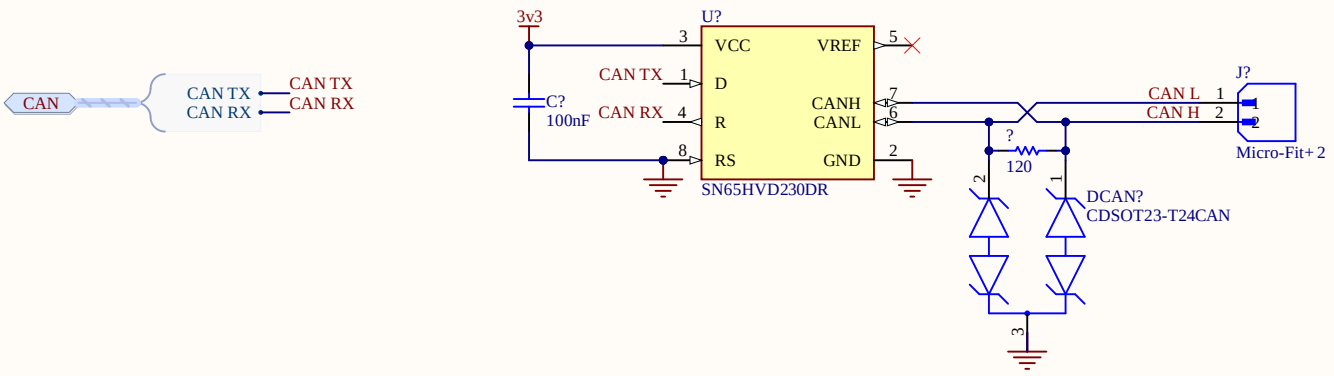

Title: CAN	
Project: MPPT V1 Afonso.PrjPcb Version: 1	
Date: 4/12/2026 Author: Afonso Coelho	
Company: Técnico Solar Boat	
File: CAN.SchDoc Page:4 of 9	

TÉCNICO SOLAR BOAT

Synchronous boost

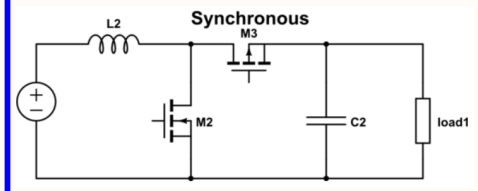

Double check the capacitors and inducotr values after simulatios

Add an heat sink. It should not be needed but it is bether to prevent redesign

Only solder R1 if Vin=Vbat+<10V

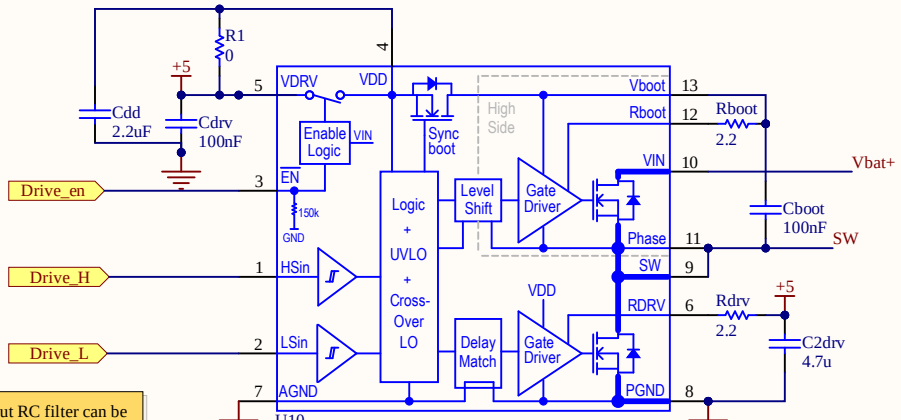

An input RC filter can be added here. The design that i saw had R=47, C=100pF, F3db=66MHz

U10
EPC23102
100V, 30A, 6.6mE Sym HB IC with UVLO & ESDs.
EPC23102

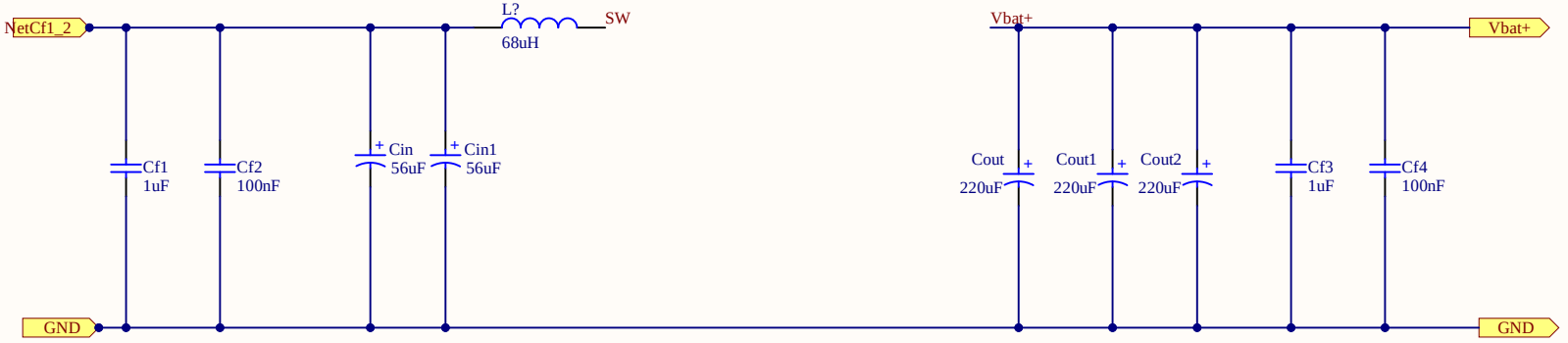

Title: Power Electonics	
Project: MPPT V1 Afonso.PrjPcb Version: 1	
Date: 4/12/2026 Author: Afonso Coelho	
Company: Técnico Solar Boat	
File: PowerElectonics.SchDoc Page:6 of 9	

TÉCNICO SOLAR BOAT

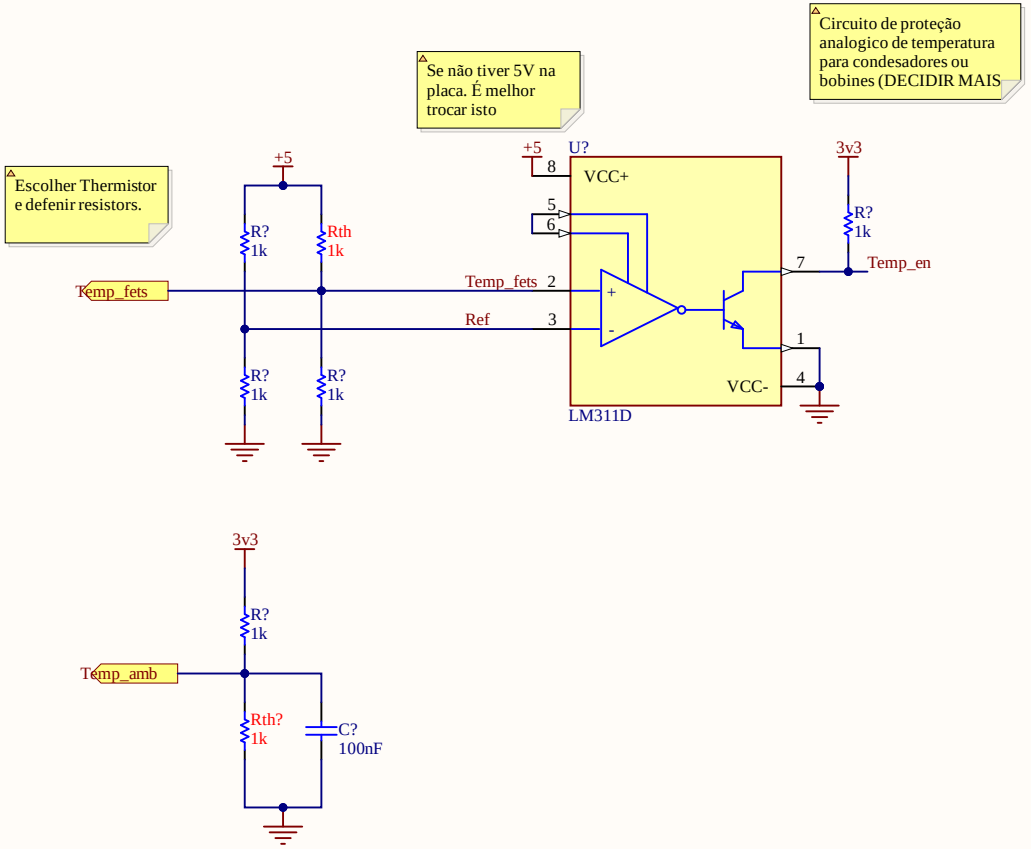

Title: Temperatures	
Project: MPPT V1 Afonso.PrjPcb Version: 1	
Date: 4/12/2026 Author: Afonso Coelho	
Company: Técnico Solar Boat	
File: Temperatures.SchDoc Page:7 of 9	

TÉCNICO SOLAR BOAT

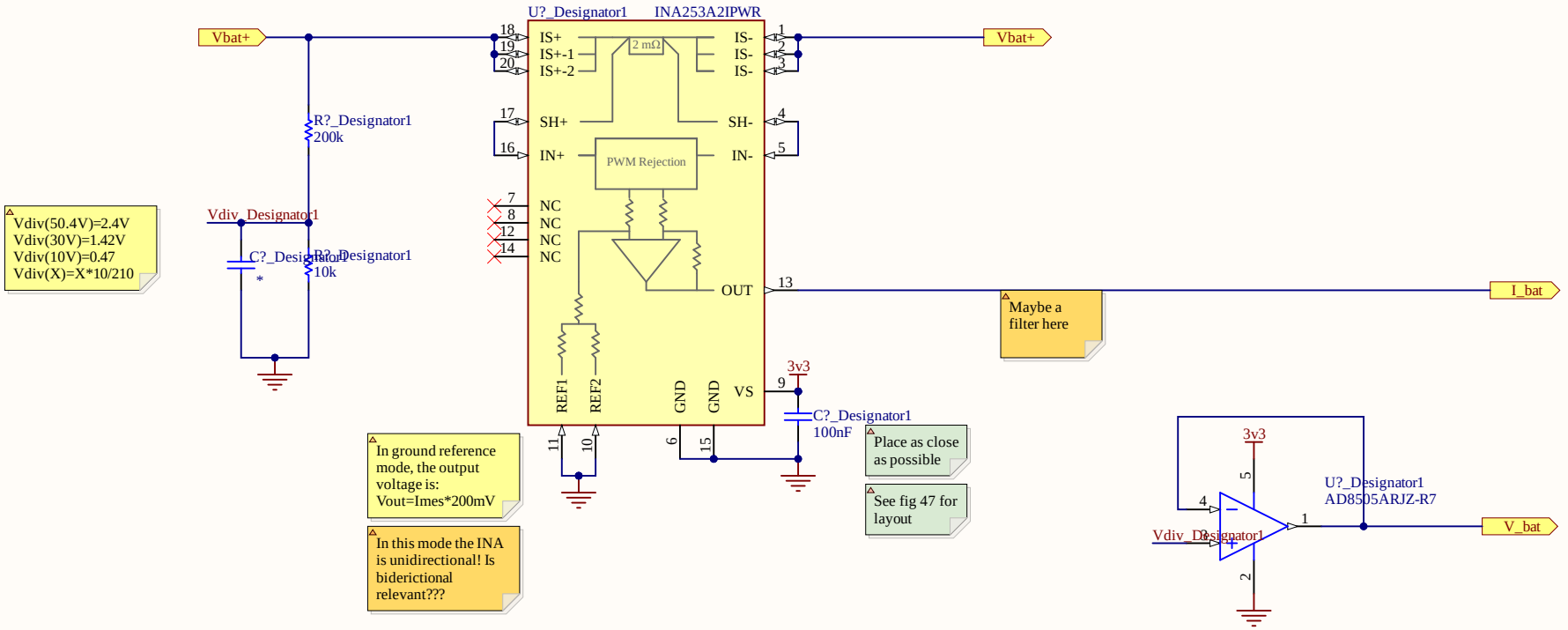

Title: Current and Voltage Sensor	
Project: MPPT V1 Afonso.PrjPcb Version: 1	
Date: 4/12/2026 Author: Afonso Coelho	
Company: Técnico Solar Boat	
File: I_V_Sense.SchDoc Page:7.1of 9	

TÉCNICO SOLAR BOAT

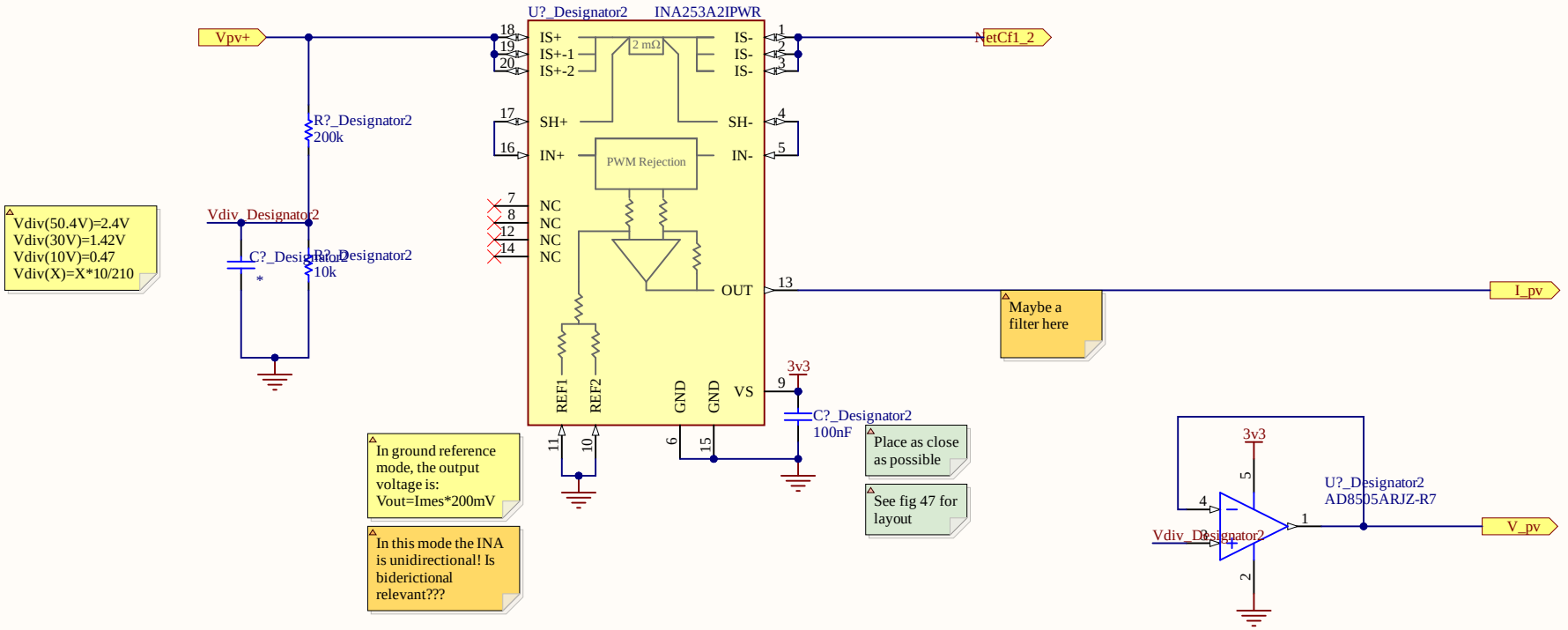

Title: Current and Voltage Sensor	
Project: MPPT V1 Afonso.PrjPcb Version: 1	
Date: 4/12/2026 Author: Afonso Coelho	
Company: Técnico Solar Boat	
File: I_V_Sense.SchDoc Page: 7.2 of 9	

TÉCNICO SOLAR BOAT

Vbat+

Title: Power Supply	
Project: MPPT V1 Afonso.PrjPcb	Version: 1
Date: 4/12/2026	Author: Afonso Coelho
Company: Técnico Solar Boat	
File: PowerSupply.SchDoc	Page:8 of 9

TÉCNICO SOLAR BOAT